Product information

VONDOM PALM Bistro Table 50x50 cm

Art.Nr.: VON1369 / manufacturer: Vondom



220,50 €

Regular retail price ~~245,00 €~~ (you save 24,50 €)

incl. 19% VAT incl. Shipping

Scaled Prices

from 4	165,00 € - you save 80,00 €
from 8	120,00 € - you save 125,00 €

Delivery time: 3 - 5 weeks







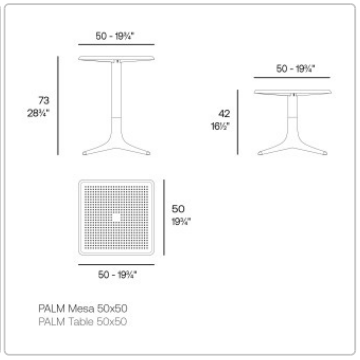

Product information




VONDOM Colors & Covers 2026

Covers/Fabrics Group 1 - 2026

Covers/Fabrics Group 2 - 2026

Covers/Fabrics Group 1-2-3 & Info - 2026

In our online store, we offer a selection of covers that are characterized by their ease of care and suitability for outdoor use. These covers are chosen 90% of the time because they offer an ideal combination of functionality, feel and comfort. You can easily make your selection using the “Vondom cover” feature.

Of course, we can offer you all covers from the Vondom collection on request. These covers, which are not available in our online store, are particularly suitable for use in regions with a predominantly sunny and dry climate or for indoor use. They impress with their particularly luxurious feel, but usually require more maintenance if soiled.

VONDOM Colors Polypropylene Products 2026

VONDOM Colors Polyethylene Products 2026

We will be happy to provide you with color and material samples free of charge. The insured return shipment is at your expense. If you make a purchase, we will refund the return postage in full. We ask you to arrange for the samples to be returned within 10 days so that they are also available to other customers.

Dimensions / Technical Data:

Optional table top dimensions approx.: 50 x 50 cm

Height of the table frame: 73 cm

Structure: Linear, through-dyed, matt lacquered polypropylene with glass fiber, weather-resistant and unbreakable

Optional color of the structure: See color palette

Product information

Other properties:
Suitable for indoor and outdoor use
Very suitable for professional use
UVI-resistant. Factor UV8, equal to 8,000 hours of sunshine in Florida
Resistant to temperatures (-60ºC to +80ºC)
Shock and wear resistant. 100% reusable

Design: Eugen Quitllet

Product description

VONDOM PALM bistro table 50x50 cm - design innovation for indoor & outdoor use
The VONDOM Palm bistro table stands for modern lightness, functional design and versatility. Designed as part of the Palm collection by Eugeni Quitllet for VONDOM, the table combines clear shapes with an organically inspired design language.

With its compact table top, the bistro table is ideal for balconies, terraces, gardens, restaurants, hotels, pool areas and modern indoor and outdoor lounges. The lightweight, weatherproof and easy-care material makes it particularly suitable for everyday use and flexible.

The Palm bistro table can be perfectly combined with the matching Palm chairs to create a harmonious ensemble for stylish bistro, dining and lounge areas. Thanks to its low weight, it can be easily moved and quickly adapted to different room or outdoor concepts.

Palm stands for modern VONDOM design with an excellent balance of functionality, comfort and contemporary aesthetics.

about Vondom

Vondom stands for a modern lifestyle. Vondom indoor & outdoor furniture is designed with passion for people who appreciate innovation and quality - people like you who love trends and demand the best.

Focus on design
Design is the key to our success. With each new collection, we create spaces full of glamor and uniqueness. Vondom furniture brings life and elegance to every room, so you can enjoy life to the full.

Global designers
Vondom collections are created in collaboration with international designers such as Fabio Novembre, Karim Rashid and many more. Their passion for modern forms and culture makes every piece of furniture an exclusive work of art.

Sustainability & Innovation
Sustainability is a core value at Vondom. Vondom is continuously researching new technologies and materials to protect our environment. Vondom shares this knowledge in workshops, exhibitions and events worldwide.

Global success
Vondom is present in over 120 countries, with flagship stores and showrooms around the world, including Valencia, Miami, Los Angeles and Shanghai.

VONDOM Material & care

Product information

Cleaning:
To clean the furniture, we recommend the occasional use of household grease solvents. Never use abrasives or corrosive solutions!
1- Pulverize the surface with grease remover.
2- Then rub the surface with a cloth moistened with water.
3- Then clean the surface with a high-pressure cleaner, e.g. from KÄRCHER or KRÄNZLE.
4- Then let it dry in the open air.

Lacquered VONDOM products are real eye-catchers! They give surfaces an incomparably high-quality appearance. However, lacquered VONDOM products are only suitable for outdoor use to a limited extent. In regions with large temperature fluctuations, the base material (polyethylene) can expand or contract minimally under thermal stress. This could lead to fine hairline cracks and ultimately to paint chipping. If you still want to use lacquered products outdoors, careful care is essential. Due to their sensitivity, lacquered surfaces should not be cleaned with water pressure. Also avoid using abrasive cleaners or corrosive solutions! Instead, we recommend applying body wax every two to three months to prevent scratches. **Please note that damage to the paint surface caused by thermal stress outdoors is not considered a valid reason for complaint and is therefore not covered. However, the legal warranty remains fully intact when used indoors.**

Protective covers:
Vondom protective covers are water, oil and dirt repellent impregnated and serve to protect the furniture. However, they are not suitable for permanent covering of the cushions, because moisture can accumulate along the seams of the covers, which may lead to the formation of mildew. Before using the protective covers, the furniture and cushions should always be dry. Please note that the slipcovers are specifically designed to fit your furniture and require precise placement. To increase air circulation, the slipcovers are not made floor-length. Never pack or fold up covers that have become wet; allow them to dry in a well-ventilated area. Use a soft cloth to clean the cover. Then rinse with clean water. Solvents are not suitable for cleaning as they may attack and damage or discolor the surface being treated.

Material properties:

Polypropylene:
This is a thermoplastic polymer that is flexible at high temperatures, withstands up to 150 °C without deformation or decomposition, and hardens when cooled sufficiently.

- Material: Polypropylene glass fiber reinforced with UV stabilizer.
- Processing method: Injection molding
- Impact resistant
- Lightweight
- 100% recyclable

Polyethylene:
Polyethylene is one of the most versatile plastics around, offering numerous advantages over other materials.

Material: LLDPE resin, linear low density polyethylene. UL 94 HB
- Processing: Rotational molding - rotational molding process
- UV - resistant, factor: UV8, equivalent to 8 000 hours of Florida sunshine
- Extreme temperature resistant (-60 to -80 degrees Celsius)
- Impact resistant
- Lightweight

Product information

- The plant pots can be easily pierced several times for drainage purposes.
- 100% recyclable

Polycarbonate:
Polycarbonate is a group of thermoplastics that can be easily machined, molded and thermoformed. It has a high resistance to breakage and impact. At Vondom, this material is injection molded with the intention of creating furniture with complex geometric shapes that do not require subsequent painting.

- Material: polycarbonate resin, low viscosity, high strength
- Process: injection molding
- Impact resistant
- Lightweight
- 100% recyclable

Polyurethane:
Polyurethane foam is a highly elastic material used in the furniture industry. It is characterized by the fact that it immediately returns to its original shape after the load is removed. Vondom uses cold spraying technology with flexible polyurethane with metal structure reinforcement inside. The result is trendy outdoor and indoor collections with a variety of colors, textures and upholstery.

PMMA:
PMMA is a highly transparent thermoplastic polymer obtained by polymerizing the monomer methyl methacrylate. Due to its high transparency, aesthetics and scratch resistance, it is an ideal material for integrating interior lighting to make it an enchanting decorative light.

Wood:
Vondom focuses on organic materials such as wood, which give the collections a unique personality. Vondom uses three types of wood: ash, iroko and teak, a material that enhances the beauty of the environment in which they are located, transforming them into wonderful spaces where we want to feel, live and enjoy.

Coverings:
Vondom offers fabrics with exceptional performance, durability and design, designed, tested and approved to withstand the harshest outdoor conditions. Stain resistant treatment, waterproofing, UV resistance, cold break and mildew resistance meet all outdoor requirements.

Aluminum:
Aluminum is a metal that features low density and high corrosion and impact resistance. It is also 100% recyclable. Vondom uses two types of aluminum, AISI12 (EN AC-44100) and 6060 (AlMgSi, 3.3206, A96060). Both aluminum parts are painted with epoxy stove enamel.

Dekton:
Dekton® is a very low-maintenance, durable and extremely resistant material. Properties that perfect key pieces in the Vondom collections, the intricate manufacturing process creates fine, elegant tabletops from a blend of more than 20 natural minerals, including the latest generation porcelain and quartz surfaces.

Table tops HPL:
The tops are composed of different layers of pressboard with a thermo-protected resin layer of melanin- formaldehyde on the surface and phenol- formaldehyde in the inner layer. The boards are pressed under high pressure and high temperatures and are suitable for both indoor and outdoor use. The edging (the edge) is generally black. The thickness of the plate is 10mm

Product information

Table tops glass:
- 10mm heat resistant glass.
- Impact resistance of soft bodies 2(B)2
- Resistance to abrupt temperature changes K 40
- Resistance to wind, snow, sustained load mm 10
- Sound insulation against direct aircraft noise dB 34 (-1,-3)

All About Your Purchase

Personal Offers Instead of Price Wars

Questions? Here Are the Answers.

Shipping the Way It Should Be

Bonus Program

Current Deals %

Our Showroom in Rüsselsheim

Real Projects, Real Quality

Materials, Care & Accessories

available options

Polypropylene



white 4001



ecru 4003



tortora 4030



black 4002

Care Products

Product information

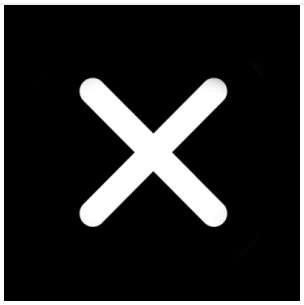

no



Surface Cleaner (+35,00 €)



Upholstery Cleaner (+95,00 €)



Surface + Upholstery (+120,00 €)