Product information

DIX HEURES DIX FIESTA x 6 Pendant Light

Art.Nr.: DIX103 / manufacturer: Dix heures Dix



dix heures dix

1.485,00 €

incl. 19% VAT incl. Shipping

Delivery time: 4 - 5 weeks







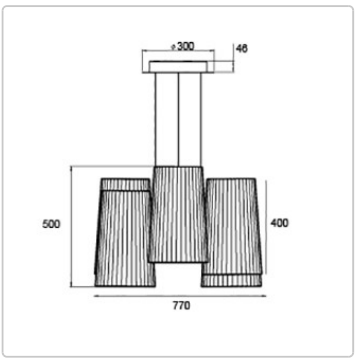

Product information



The Colonne lamp series from Dix heures Dix is reminiscent of classic columns and adds elegance to any room. The Colonne floor lamp, with its pleated fabric shade, creates a warm atmosphere and distributes the light evenly.

Dimensions / Technical data:

Approx. dimensions: Ø 77cm, height 50cm, total height incl. suspension 5m

Light source: Integrated LED 32 Watt, 2700° Kelvin, 3600 Lumen, 110-240 Volt

Canopy: Ø 300mm, white aluminum

Lampshade: Aluminum with gold finish

Cover lampshade: Multi-pleated, pleated cover, white

Cover color: white

Optional control:
Phase on & off dimmable (3-core power cable)
DALI dimmable (DALI = digital light control) 4- or 5-core power cable (control cable) required!
Casambi Bluetooth dimmable. Light control via app (3-core power cable).

Supply line: 5 meter long, transparent cable

Design: Fabrice Berrux

Product description

Fiesta - New collection of French designer lamps from 10 Heures 10 (2025)

The Fiesta collection from 10 Heures 10 is a tribute to lightness, joy and modern French design.
Designed by Fabrice Berrux, this new series of pendant lights combines simple, textile elegance with a poetic play of light.

The white fabric shade with its finely pleated structure creates a soft, diffuse light that bathes rooms in a warm, inviting atmosphere. Available as a single luminaire or in the Fiesta x3, x6 and x8 versions, the series offers numerous possibilities for private and public spaces - from living and dining areas to hotel lounges.

With integrated, dimmable LED lighting (TRIAC) and optional DALI or CASAMBI control, Fiesta stands for modern lighting design that elegantly combines emotion and technology.

Diameter 770 mm - Canopy white - Made in France

Product information

about Dix heures Dix

Behind the name Dix heures Dix hide the two designers Catherine Grandidierand Fabrice Berrux. The Dix heures Dix manufactory clearly reflects this dichotomy. Unusual color combinations and the use of unusual materials are the hallmark of Catherine Grandidier's lamps. Following the success of textile collections such as La Colonne, dix heures dix has deliberately chosen to use modern, innovative and high-quality materials (Tyvek®, Dibond®, Corian®, etc.) for its latest creations. By mixing architectural, artistic, plant or fashion inspirations, the two designers (Fabrice Berrux and Ludovic Roth) strive to invent a narrative light where each product tells its own story.

The balance between the rigorous approach of industrial design and the wealth of artisanal know-how allows Dix heures Dix, to produce innovative and high quality lighting solutions.

All About Your Purchase

Personal Offers Instead of Price Wars

Questions? Here Are the Answers.

Shipping the Way It Should Be

Bonus Program

Current Deals %

Our Showroom in Rüsselsheim

Real Projects, Real Quality

Materials, Care & Accessories

available options

Connection

Product information



Phases dimmable on/off



Dali dimmable (+90,00 €)



Casambi Bluetooth dimmable (+155,00 €)