Product information

MOONLIGHT hemisphere HMFL flexible version white

Art.Nr.: MOO34 / manufacturer: Moonlight



479,75 €

Regular retail price ~~505,00 €~~ (you save 25,25 €)

incl. 19% VAT incl. Shipping

Delivery time: 1 week

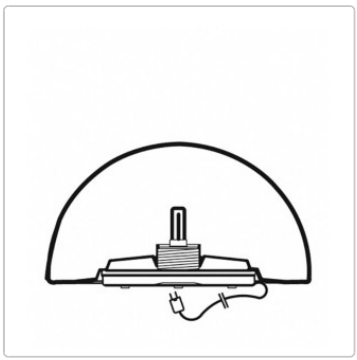







Product information





Dimensions / Technical data:

Optional dimensions approx:
Ø 35cm
Ø 55cm
Ø 75cm

Material: Polyethylene, white

Application: HMFL = Flexible version: Includes 2 meter cable and mains plug

Light source / color temperature (brightness) of the light source optional:
2700 Kelvin = subdued light
4000 Kelvin = bright light
6500 Kelvin = very bright light (recommended for the colored versions)

Special feature:
Luminaires made of unbreakable PE material, impact-resistant and robust
Waterproof, dimensionally stable and UV-resistant
Cold and heat resistant from -40° to +80°C
Each hemisphere is individually molded from polyethylene
Ideally suited for indoor and outdoor use

Available accessories: cleaning set (case with spray bottle, cleaning sponge, gloves)

Product description

Moonlight Lamp Hemisphere
The Moonlight as a hemisphere has the same light characteristics as the full sphere, with a slightly lower overall height. This makes it particularly suitable as a wall and floor lamp for indoor and outdoor use.

Due to the design, not all illuminants are compatible with the hemisphere. In order to achieve optimal illumination, please note our recommendations.

Product information

Details

Our versatile Moonlight globes are of moulded polyethylene. They are extremely impact resistant and robust. Temperatures of -40° to +80° Celsius do not cause any problems for our lights. The positive overall impression is topped off with additional features such as UV stability, longevity and watertightness.

Moonlight products are certified according to: CSA C 22.2 / UL 153 / EN 60598 / VDE 0711
Development, production and distribution according to DIN EN ISO 14001:1996

Cleaning & care

All Moonlights irrespective of their surface are easy to clean in general.
In case of strong soiling due to environmental influences such as soot, etc. we recommend using a special detergent which cleans the surface gently.

About Moonlight

Making people happy with atmospheric lighting
Moonlight luminaires captivate with their design, unique lighting atmosphere and the highest quality standards - made in Germany.

Unique interior and exterior lighting
The unmatched ambience and diffusion experience as outdoor and indoor lighting goes into a new round with a lot of passion. Be excited about the further development of the award-winning design. Through our years of experience designing with light, one thing remains the same: the high-quality appeal and virtually indestructible durability of Moonlight lighting.

Moonlight luminaires - lighting with excellent design
By using Moonlight luminaires in garden design, accentuated islands of light can be created that not only transform any garden into an atmospheric oasis, but also enhance the structural substance.

All About Your Purchase

Personal Offers Instead of Price Wars

Questions? Here Are the Answers.

Shipping the Way It Should Be

Bonus Program

Current Deals %

Our Showroom in Rüsselsheim

Real Projects, Real Quality

Materials, Care & Accessories

Product information

available options

Diameter

Ø 35cm
Ø 55cm (+185,00 €)
Ø 75cm (+660,00 €)

Light source


without


LED white, 3000 Kelvin (+15,00 €)


LED white, 4000 Kelvin (+15,00 €)


LED white, 6000 Kelvin (+15,00 €)


LED RGB with remote control (+55,00 €)

Cleaning set

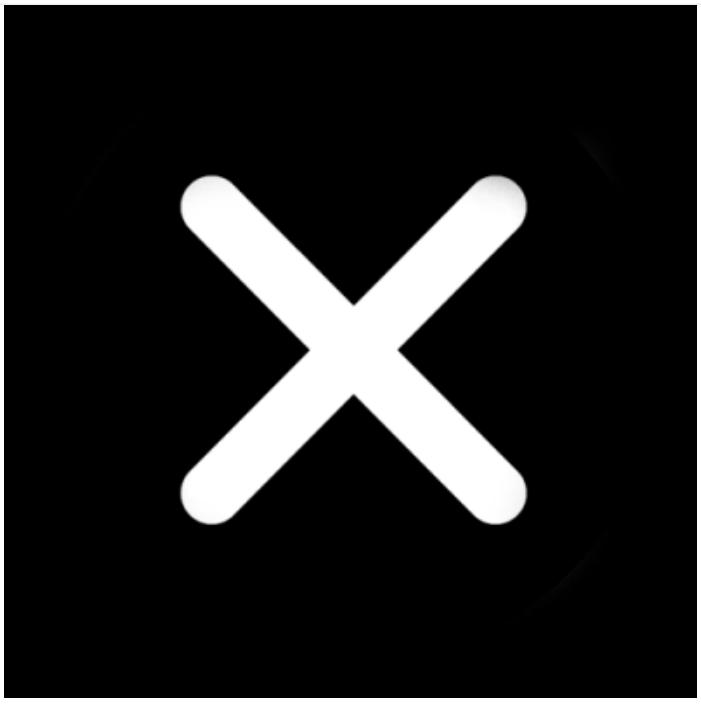
No



yes (+34,00 €)