Product information

SCULPTURES JEUX Functional furniture GIRALOT wardrobe

Art.Nr.: SCJ58 / manufacturer: Sculptures Jeux



Sculptures Jeux

1.696,50 €

Regular retail price ~~1.885,00 €~~ (you save 188,50 €)

incl. 19% VAT incl. Shipping

Delivery time: 4 - 6 weeks






Product information

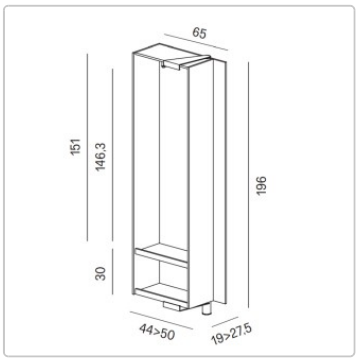

Giralot is a movable, variable functional piece of furniture for many applications in the smallest of spaces.

Dimensions / Technical data:

Approx. dimensions: width 65cm, height 196cm, depth 27.5cm

Container: chipboard / multilayer board matt lacquered or veneered

Column: aluminum grey lacquered (mounting on left or right side possible)

Combination consisting of:
1 container, swiveling with 1 shelf and 4 hangers in MDF grey included

Available accessories: Front mirror

Assembly: The furniture is delivered fully assembled

Design: Stefano Bettio 2020

Product description

The space contains the form, the function of which can only be experienced by the viewer through the rotating movement. The apparently strict geometric regularity of Giralot is suddenly broken up by the asymmetrical play of the movable containers. Giralot shoe cabinet is a movable, variable piece of container furniture with a column on the left or right, which is placed on the floor and fixed to the wall at 2 points and serves as an axis for the containers, which can be swiveled through 180°. The depth is 30 cm. The container is available in V veneer (wood) or T Touch (color lacquered). The intermediate shelf can support a weight of up to 15 kg. The unit is supplied fully assembled. The maximum height of the baseboard in the standard version is 7.5 cm. For a maximum height of 17.5 cm, a visible extension piece of 10 cm is available, resulting in a new total height for Giralot of 206 cm; the heights of the swivel containers remain unchanged.

about Sculptures Jeux

Product information

Sculptures Jeux is about playing with spaces, making the home lively and changeable, it's about being original by bringing color into our lives.
Home is the refuge of our feelings, a place where we experience emotions with the people we love.
Thus, the space that surrounds us gains importance, the furniture follows our personality, it is one with what we want to convey every day, it means communicating without saying a word, but with materials, shapes and colors. People and their creativity are at the center of the room.

Sculptures Jeux is committed to the green concept and uses a photovoltaic system to support 70% of its production. All panel and solid material suppliers are FSC-certified. The combustion of the biomass generated from the operation heats Sculptures Jeux's offices and workplaces and the production follows US regulations for low formaldehyde emissions.

All About Your Purchase

Personal Offers Instead of Price Wars

Questions? Here Are the Answers.

Shipping the Way It Should Be

Bonus Program

Current Deals %

Our Showroom in Rüsselsheim

Real Projects, Real Quality

Materials, Care & Accessories

available options

Container 1

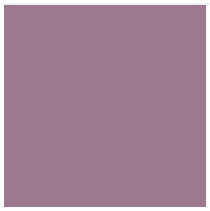
Laminat T39 Lavanda


Laminat T37 Sahara

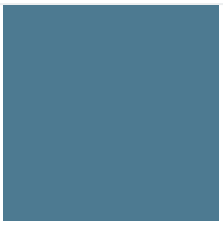
Laminat T46 Avio

Laminat T01 Bianko

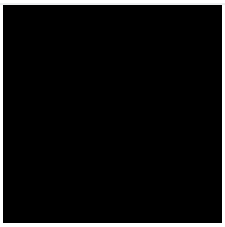
Laminat T02 Nero


Laminat T03 Ocra

Product information


Laminat T05 Rosso


Laminat T08 Oceano

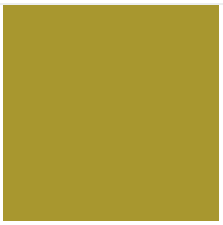
Laminat T09 Pistacchio

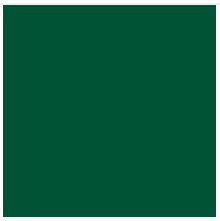
Laminat T10 Smeraldo

Laminat T14 Perla


Laminat T15 Grafite


Laminat T18 Tortora

Laminat T19 Corda

Laminat T20 Latte


Laminat T25 Mattone

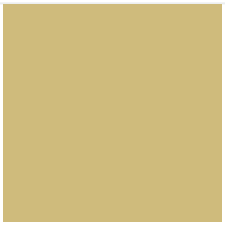
Laminat T26 Sabbia

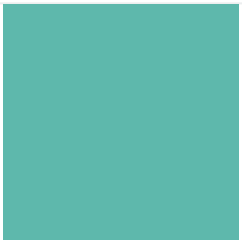
Laminat T32 Aquamarina


Laminat T34 Blu


Laminat T36 Toffe

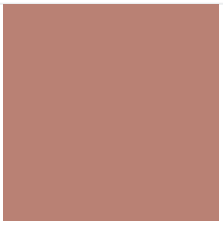
Laminat T38 Rosa Antico


Laminat T40 Teracotta

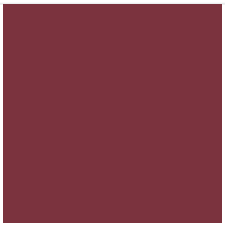
Laminat T41 Rubino

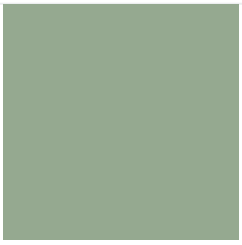
Laminat T42 Malva


Laminat T43 Salvia


Laminat T44 Lime


Laminat T45 Zafferano


Oak (+265,00 €)


Oak, stained anthracite (+265,00 €)


American walnut (+425,00 €)

Pillar

Product information

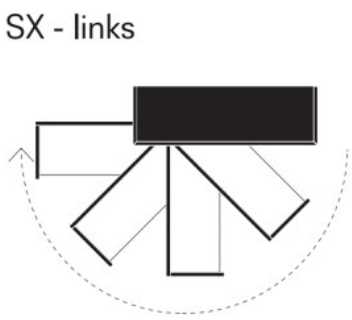

Links

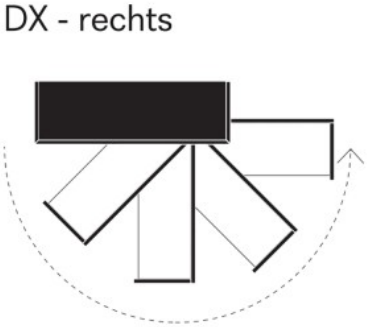

Right

Column extension of 10 cm (+185,00 €)

Front mirror

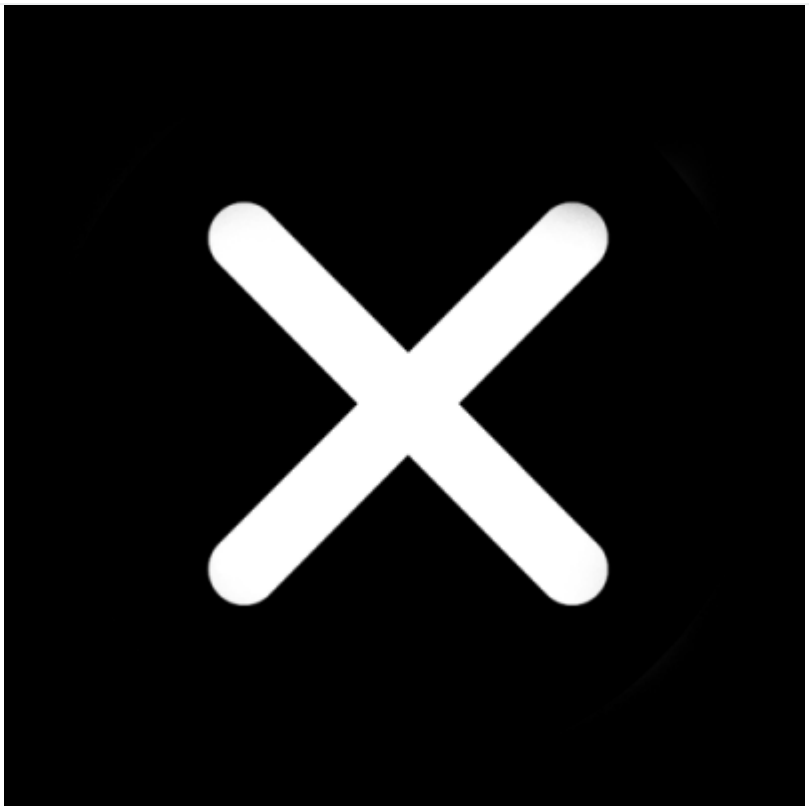

No

Yes (+265,00 €)