Product information

GlammFire bench for fireplaces

Art.Nr.: GLF98 / manufacturer: GlammFire



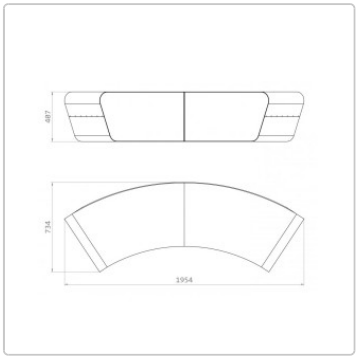

2.730,00 €

incl. 19% VAT incl. Shipping

Delivery time: 4 - 8 weeks

Product information

Dimensions / Technical Data:

Approx. dimensions: width 195.4cm, depth 73.4cm, height 40.7cm

Structure: steel

Bench finish: steel black powder coated

About Glammfire

GlammFire was founded in 2008 in Northern Portugal and is a luxury fireplace brand that works worldwide. GlammFire represents Portuguese design as well as modern / contemporary style. As one of the most sought-after fireplace brands in the world, GlammFire specializes in designing and manufacturing exclusive fireplaces that fit into a new lifestyle.

The will to be more efficient, the search for differentiation achieved through the development of unique products and the respectful commitment to ecology are present in every detail of GlammFire products.

All About Your Purchase

Personal Offers Instead of Price Wars

Questions? Here Are the Answers.

Shipping the Way It Should Be

Bonus Program

Current Deals %

Our Showroom in Rüsselsheim

Real Projects, Real Quality

Materials, Care & Accessories