Product information

MAWA Wittenberg 4.0 - LED recessed spotlight downlight IP44 round - 1-lamp

Art.Nr.: MAW424 / GTIN: 4059735044649 / manufacturer: Mawa Design



120,00 €

incl. 19% VAT incl. Shipping

Scaled Prices

from 4	105,00 € - you save 15,00 €
from 6	98,00 € - you save 22,00 €

Delivery time: 3 - 5 weeks

Product information



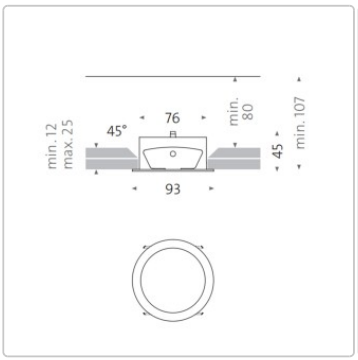





Dimensions / Technical Data:

Dimensions approx: Ø 9.3m

Total height: 4.5cm
Ceiling cut-out: Ø 8cm
Installation depth: 10.7cm

Optional light source:
LED 12.7 Watt, Ra > 95, service life > 61000 hours
dim2warm LED 12 Watt, Ra > 97, service life > 50000 hours (for DALI or Casambi Bluetooth)

Color temperature optional:
2700 Kelvin warm white - 930 lumen
3000 Kelvin bright warm white - 980 lumen
4000 Kelvin neutral white - 1100 lumen
1800 - 3000 Kelvin dim2warm - 1045 lumen

Product information

Optional beam angle:
12° = spot
24° = medium
38° = flood

With widening attachment (30° / 60°) extended to:
12° → 32° / 61°
24° → 38° / 64°
38° → 48° / 71°

Material: powder-coated aluminum

Control optional:
Without converter (2700 - 3000 - 4000 Kelvin): No operation without converter possible! Purchase via electrician (3-core power cable)
Phase on & off dimmable (2700 - 3000 - 4000 Kelvin): 3-core power cable
DALI dimmable (2700 - 3000 - 4000 Kelvin): For 4- or 5-core power cable (control cable) required!
Casambi-Bluetooth dimmable (2700 - 3000 - 4000 Kelvin): Light control via app (3-wire power cable).
dim2warm DALI dimmable (1800-3000 Kelvin): For 4- or 5-core power cable (control cable) required!
dim2warm Casambi-Bluetooth dimmable 1800-3000 Kelvin): Light control via app (3-wire power cable).

Converter: Exclusive

Design: MAWA

Available accessories:
LED converter & secondary cable
Widening attachment: For widening the beam angle. Installation ex works recommended!
Shutter: Made of aluminum in the color of the spotlight (white or black) for lateral glare control
Honeycomb louvre: Provides targeted glare control for the spotlights in the Wittenberg 4.0 series
Sculpture lens: Its elliptical light distribution ensures uniform illumination.
Suction lifter: For changing the lens without tools, e.g. from 12° to 24° or 38°

Minimum order quantity: 2 spotlights

Product description

wittenberg 4.0
DISCONNECTOR DOWNLIGHT wi4-eb-1r-dl-ip44

DOWNLIGHT

with round, overlapping edge for fixed installation in drywall ceilings, without visible screws and cables. The new light head with doubled light output and improved color rendering impresses with its large, well glare-free light emission surface. An additional acrylic glass cover protects the luminaire against splashing water IP44 (only for overhead mounting). Series DEKRA tested.

Product information

With the extensive range of accessories - interchangeable optics, LSD special diffusers, honeycomb louvers and shutters - the beam angle and light control can be fine-tuned. A bayonet lock secures the light head to the housing and enables quick partial replacement. Another advantage: ceiling-integrated components remain accessible for inspection - without removing the entire housing. The surface is powder-coated in RAL 9016 white matt or RAL 9005 black matt as standard. Individual special luminaires are manufactured by mawa on request.

Notice:
A control gear is mandatory for the operation of the luminaire. The control gear is not included as standard, but can be added as an option in the configuration menu.

About Mawa Design

Mawa Design was founded in 1977 by Martin Wallroth. In the company, which was then located in Kreuzberg, he developed and produced objects for the living area. In the following years, the one-man business expanded and established itself as a professional company. During this time, Mawa Design designs often took a pioneering role for formative ideas in the field of product design. To this day, the unusual combination of design office and manufactory contributes significantly to the company's success.

The eighties made understanding and interest in design popular. Mawa Design therefore broke new ground. In cooperation with external designers, product ideas for everyday life could be designed and quickly implemented due to the flexible structure of the company. The product range finds its customers mainly in the upscale retail trade.

In addition to the standard program of the manufactory, special productions according to individual specifications can of course also be realized. For example, luminaires have been produced for the Federal Chancellery, the Ministry of Economics, the Corbusier House, the Maxim Gorki Theater in Berlin or for the Luther House in Wittenberg. Renowned companies such as BMW, Daimler Benz, Jil Sander, Hotel Bleibtreu, KaDeWe, Sony or The Conran Shop work with Mawa Design when it comes to first-class lighting. Mawa products, which are characterized by high-quality materials and excellent workmanship, have been included in important collections of museums around the world.

Green light for further growth. With its own design department, research and development, as well as its own lighting laboratory, the company is now one of the preferred partners of internationally active specialist planners. mawa design has advanced from being an insider tip to a leading brand in the contract sector, especially in museums, libraries, sacred buildings and monuments with minimalist lighting tools. A new branding with a striking logo reflects the far-reaching importance of the company in the professional world. Here, too, the following applies to the design: less is more. And so in 2017, the brand name is also reduced to two syllables - mawa design becomes mawa. Only color and attitude remained unchanged green.

All About Your Purchase

Personal Offers Instead of Price Wars

Questions? Here Are the Answers.

Shipping the Way It Should Be

Bonus Program

Product information

Current Deals %

Our Showroom in Rüsselsheim

Real Projects, Real Quality

Materials, Care & Accessories

available options

Connection

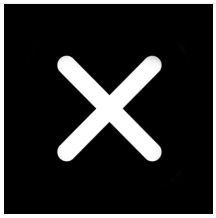

Without converter



Phases dimmable on/off (+33,00 €)



Dali dimmable (+65,00 €)



Casambi Bluetooth dimmable (+140,00 €)



dim2warm DALI dimmable (+120,00 €)



dim2warm Bluetooth dimmable (+195,00 €)

MAWA Color



RAL 9016 white matt



RAL 9005 black matt

Product information

Kelvin



2700



3000



4000

Beam angle



12°



24°



38°