Product information

MOREE Bar Combination / Counter LED - 764 x 107 x 149 cm

Art.Nr.: MOR10 / manufacturer: Moree







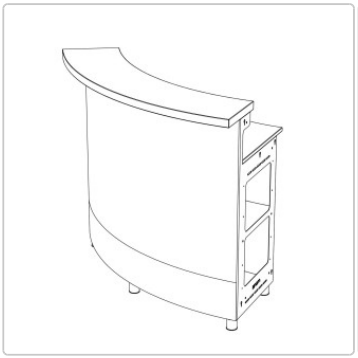



14.004,00 €

Regular retail price ~~15.560,00 €~~ (you save 1.556,00 €)

incl. 19% VAT incl. Shipping

Delivery time: 6 - 8 weeks

Product information

With the Moree counter modules, you can create your own counter configurations. All modules can be combined with one another.

Dimensions / Technical Data:

Approx. dimensions: width 764cm, depth 149cm, height 107cm (with feet 2cm)

Structure: MDF wood, straight edges, HPL white coated

Integrated and separately operable multicolor LED units:
Per module: LED front lighting, individually controllable, multicolor LED's max. 28 watts, 500/540 lumens, lifetime 30000 hrs.
Per module: LED task lighting, individually controllable, multicolor LED's max. 20 Watt, 500/510 Lumen, lifetime 30000 hrs.

Cable length: 4 meters, black per module
Voltage 220-240 Volt, 50 Hz
protection class II
Radio remote control with 4 channels

Application: suitable for indoor use

End panels and counter top optionally in the following surface finishes:
MDF wood, straight edges, HPL white coated
MDF wood, rounded edges, white satin finish

Included in delivery:
9 x counter modules each 60° with counter top, worktop and one shelf each, MDF wood, straight edges, HPL white coated
4 x counter modules each 60° concave with counter top, worktop and one shelf each, MDF wood, straight edges, HPL white coated
1 x end panel left, MDF wood, straight edges, HPL white coated
1 x end panel right, MDF wood, straight edges, HPL white coated
Adjustable counter feet, 2cm or 6cm high or castors with brake, 6,5cm or 10cm high at choice

Note: If 10cm high casters are selected, the bar elements are suitable for transport by forklift and for storage in a shelf warehouse

Available accessories: stainless steel sink with draining board

Design: Moree Design

Product description

Moree presents a new, innovative counter system, which consists of different, straight and round modules that can be combined with each other.

It was developed by our designers especially for the gastronomy, event and trade fair sector and convinces with timeless design and high-quality workmanship. The materials used for the representative event furniture are robust, timelessly beautiful and easy to clean. In addition to a coated surface, the circumferential counter board can also be supplied with a high-quality lacquer finish. On the sides, the counter modules are closed with lacquered end pieces. The counter board and end pieces can also be lacquered in special colors or made of solid wood.
The counter can be used for mobile applications at trade fairs and events as well as for stationary applications in restaurants and hotels. Whether open, semi-open or closed bar module, counter, reception counter, DJ booth, mobile cocktail bar or large trade fair counter for hospitality, corner solution or round counter - the bar system

Product information

adapts to the spatial conditions and customer requirements. It offers ample storage space on top as well as plenty of storage space inside.

The special feature: the individual bar modules have two separately operated multicolor LED units, so that the front and work area behind the counter can shine in different colors of your choice. The integrated lighting is controlled by radio remote control, whereby four channels are available and thus not only individual areas (front or work surface) but also the different segments can be controlled individually. Colors can be adapted to the event and an impressive atmosphere can be created. Configure your desired system specifically to your requirements. In the product details you will find all the necessary information. The counter can also be ideally combined with our bar stools "ED". We are also happy to advise you personally, please contact us if you need more information or an individual offer.

About Moree

Moree is a specialist for high-quality illuminated furniture and living room accessories, made for people who appreciate sensual, urban living. The love of clear forms, innovative materials combined with a fascination of the effect of light, Moree designers are always exploring expressive and timeless ideas for interiors and exteriors.

The range is based on an extensive collection of illuminated tables and objects as well as seating, for living rooms, gardens, restaurants, bars and clubs. Functionality, durability and stylish design stands for the success of our German brand.

Moree furniture can be individually branded, giving companies and product advertisements high visibility. Unique, eye-catching and intriguing.

Moree combines exquisite form with highly functional products, available in over 30 countries only in selected furnishing and design stores.

All About Your Purchase

Personal Offers Instead of Price Wars

Questions? Here Are the Answers.

Shipping the Way It Should Be

Bonus Program

Current Deals %

Our Showroom in Rüsselsheim

Real Projects, Real Quality

Materials, Care & Accessories

available options

Floor stand

Product information

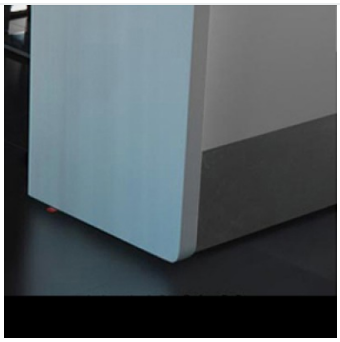

Feet 20mm



Feet 60mm

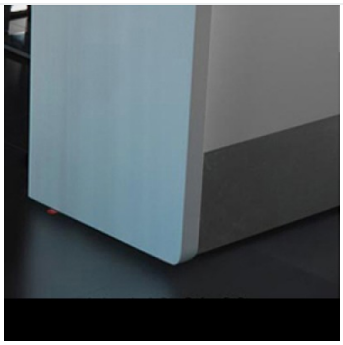

Rollers - 6,5cm

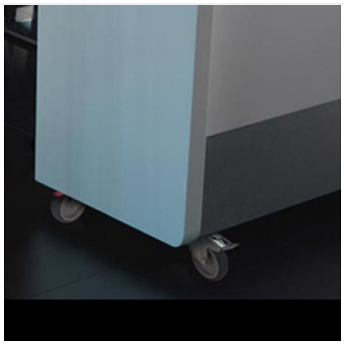

Rollers 10cm

Sink



No



yes (+440,00 €)

Sides & counter top

Product information



HPL Coated



White satin lacquered (+360,00 €)