Product information

SERRALUNGA Illuminated planter PRIMAVERA

Art.Nr.: SER117 / manufacturer: Serralunga



1.522,90 €

Regular retail price ~~1.570,00 €~~ (you save 47,10 €)

incl. 19% VAT incl. Shipping

Delivery time: 3 - 4 weeks

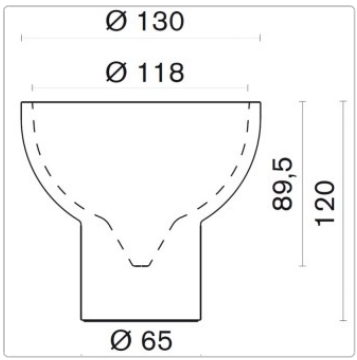

Product information



Dimensiones / Technical Data:

Outer dimensions approx: Ø top 130cm, Ø bottom 65cm, height 120cm

Plant depth approx.: Ø 118cm, depth 89.5cm (tapering to approx. 10cm at the bottom)

Material: polyethylene, translucent, weather resistant and unbreakable

Lighting optional:
LED cool white, 1250 lumen, 6000 Kelvin, cable lead 3 meters, black
RGB LED with remote control, cable lead 3 meters, black

Special feature:
Double-walled planter
Clean Fighter surface - easy cleaning of the surface thanks to new sealing
Suitable for indoor and outdoor use
Very suitable for professional use in restaurants and offices
Resistant to temperatures (-35ºC to +80ºC)
Shock and wear resistant. 100% reusable

Product description

The lighted version of Primavera, suited for both indoor as outdoor. This large planter offers support for various types of plants from hanging succulants to small trees and will create an impact in your outdoor area.
Made from lightweight yet durable rotationally moulded polyethylene. UV protection. 100% recyclable, spundyed. Available either with energy-saving bulbs or with an RGB LED.

"As a designer, I love simple and basic shapes, like the ones of a sphere or a tube. In these particular large planters, these two shapes meet up beautifully. Spring is my favourite season of the year, and this is the reason why I chose to call these large planters Primavera - Spring -." — Eero Aarnio

Serralunga Clean Fighter

SERRALUNGA presents CLEAN FIGHTER, a new innovative composite for fast and efficient cleaning.

As part of Serralunga's ongoing research and innovation activities, a new compound has been developed: Clean Fighter.

Clean Fighter is an innovative composite that allows fast and efficient cleaning of all Serralunga furniture, flower pots and furnishings in standard colors. Less time spent cleaning is the result. CLEAN FIGHTER is not needed for products in matt or glossy finish.

Product information

Clean Fighter is absolutely versatile. Particular feature is the ability of the material to adapt to different shapes.

about Serralunga

The first in Europe to develop rotational molding technology, the first to introduce the design jug and conceive the oversized jug. The first to design the illuminated jug, the first to exhibit an industrial vase in a museum and the first to develop new painting technologies with patterns.

Those who choose Serralunga can recognize and appreciate originality.

A FAMILY BUSINESS WITH HEART

THE HERITAGE
Serralunga was founded in Biella in 1825 and is the name of the family that has been the creative and entrepreneurial heart of the company for six generations, producing modern outdoor furniture.

The company was founded as a tannery and then moved to leather processing for industrial purposes. The real revolution came with the processing of plastic and then with the rotational molding technology imported from the United States, which has produced countless Italian design objects such as outdoor lighting and contemporary furniture, all made in Italy.

MADE IN ITALY
Serralunga continues the excellence that has long been associated with the "Made in Italy" label, while offering new ways of living that allow us to relax and unwind with furnishings that enrich our lives.

CULTURAL INNOVATION
Serralunga is known for pushing the boundaries of materials, technologies and aesthetics with its sense of innovation and craftsmanship to create groundbreaking products that both inspire and delight.

All About Your Purchase

Personal Offers Instead of Price Wars

Questions? Here Are the Answers.

Shipping the Way It Should Be

Bonus Program

Current Deals %

Our Showroom in Rüsselsheim

Real Projects, Real Quality

Materials, Care & Accessories

available options

Product information

Lighting

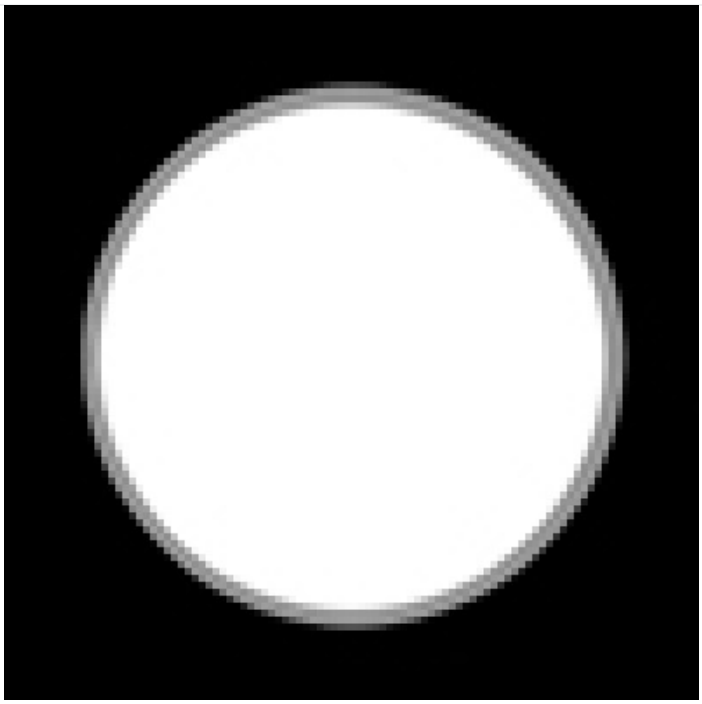

LED cold white

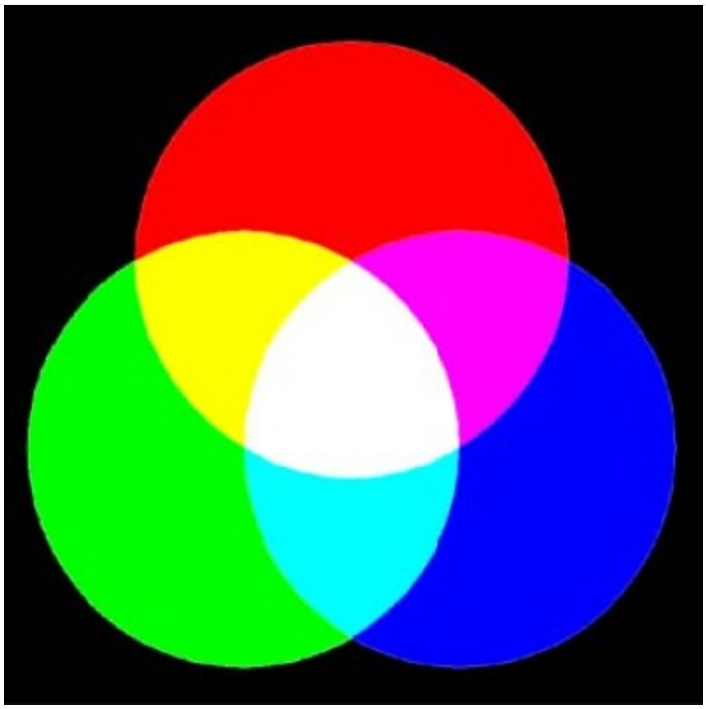

LED RGB (+40,00 €)