Product information

VONDOM CHRISMY Design Christmas tree LED-Outdoor 200

Art.Nr.: VON222 / GTIN: 8412524208817 / manufacturer: Vondom



−5% with any payment method

1.570,00 €

Regular retail price ~~1.840,00 €~~ (you save 270,00 €)

incl. 19% VAT incl. Shipping

Delivery time: 2 - 4 weeks



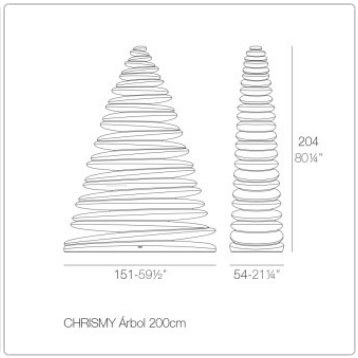





Product information




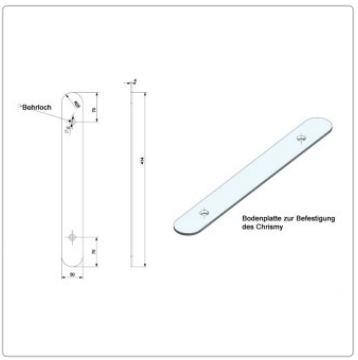



Dimensions / Technical Data:

Approx. dimensions: Width 150 cm, Depth 54 cm, Height 200 cm

Weight: 61 kg

Material & Construction

Material: Linear polyethylene, translucent, weather-resistant, and shatterproof

Base: Steel, powder-coated with height-adjustable feet

Light source: White LED 4000–4500 Kelvin or multicolor 6500 Kelvin, 16–72 watts max. depending on model, power supply IN: 100–240 volts AC, 50–60 Hz

Lighting options:
White LED, 4000–4500 Kelvin
RGB LED lighting with remote control
RGB LED lighting with remote control and rechargeable battery + charger. Charging time: 4 hours; runtime: 6 hours; 500 cycles
RGB LED DMX lighting with remote control(Wi-Fi access point required)
RGB LED DMX lighting with remote control and rechargeable battery + charger. Charging time: 4 hours, runtime: 6 hours, 500 cycles(Wi-Fi access point required)

Remote control: Range 10–15 meters

Protection class: IP65

Power cord: 2 meters, white (plug options: EU, AUS, UK, or USA)

Special feature:

Product information

Suitable for indoor and outdoor use
Highly suitable for professional use in restaurants and offices
UV-resistant. UV8 rating, equivalent to 8,000 hours of Florida sunshine
Temperature-resistant (-60°C to +80°C)
Shock- and wear-resistant. 100% reusable

Available accessories: DMX Wireless Home Wi-Fi Access Point

DMX Home WIFI is an access point that allows you to control all VONDOM products using an iOS or Android tablet or smartphone.
You can create custom and specialized environments. Control the entertainment lighting of every VONDOM product—such as furniture, planters, and lights—individually or as a group.
We'd be happy to provide you with detailed advice—give us a call!

Additional accessories: Stainless steel floor mounting plates.

Design: Teresa Sapey

Product description

CHRISMY the new Christmas piece of VONDOM by Teresa Sapey.

Inspired in natural, organic and elegant shapes that rise towards its peak in each of its silhouette to-and-fro movement.
Its interior lighting creates a true enveloping atmospheres to be able to enjoy them in different spaces.
A renewed classic, refined in its timeless modernity, easily adaptable.
Pure visual magic achieved through its logical continuation.

Available in the following sizes

H: 25 cm / B 19 cm / T 13 cm
H: 50 cm / B 38 cm / T 26 cm
H: 100 cm / B 75 cm / T 32 cm
H: 150 cm / B 110 cm / T 40 cm
H: 200 cm / B 150 cm / T 54 cm

FAQ Chrismy

VONDOM CHRISMY – FAQs on LED Lighting, Controls and Outdoor Use

Are VONDOM Christmas Trees Suitable for Outdoor Use?

Yes. CHRISMY and FOREST are designed for both indoor and outdoor use. Their materials are UV-resistant and weatherproof. LED versions intended for outdoor installation have an IP65 protection rating.

IP65 means that the protected components are dust-tight and resistant to water jets, making them suitable for typical winter weather conditions.

Product information

All electrical connections and accessories must also be installed and used according to their respective protection ratings.

Which LED Lighting Option Should You Choose?

When choosing an illuminated designer Christmas tree, the lighting system is a key consideration. The options differ not only in colour but also in how the lighting can be controlled.

White LED – Elegant, Consistent White Lighting
The White LED version emits a fixed neutral white light with a colour temperature of approximately 4,000–4,500 K.

As only one white tone is available, no remote control is required or supplied.

The lighting is powered through a plug-in cable and can be switched on and off using a suitable switched socket or timer.

Our recommendation: Choose White LED for elegant, uniform Christmas lighting without colour changes.

RGB LED – 3 White Tones, 9 Colours and Custom Lighting Effects
The RGB LED version offers considerably more flexibility.

Choose between warm white, neutral white and cool white, plus nine additional colours.

The included remote control allows you to:

- select individual fixed colours,
- activate automatic colour sequences,
- adjust the speed of colour transitions,
- control brightness.

This makes it easy to adapt the lighting to different surroundings, occasions and preferences.

If you own several illuminated VONDOM products, you can assign a different fixed colour to each one.

Our recommendation: Standard RGB LED is more than sufficient for most residential settings and many commercial installations.

WiFi and DMX – Synchronised Lighting for Multiple VONDOM Products
Advanced lighting control is particularly useful when several illuminated VONDOM products need to change colours automatically and in perfect synchronisation.

Standard RGB LED also offers automatic colour sequences. However, when several products are operated independently with their own remote controls, their colour transitions gradually fall out of sync.

Visible differences may appear after just a few minutes.

For example, if five CHRISMY Christmas trees or a combination of illuminated trees, planters and lounge furniture should display identical colour changes, a compatible central control system is recommended.

VONDOM Access Point HOME – Smartphone and Tablet Control
Compatible WiFi control requires the separately available VONDOM Access Point HOME.

It allows you to operate the lighting through a dedicated smartphone or tablet app.

Access Point HOME can control up to ten compatible products within an approximate range of 12–15 m. Actual range depends on local conditions.

Product information

Multiple illuminated objects can therefore be controlled together with synchronised colour changes.

Control is provided through the app rather than the individual remote controls.

VONDOM Access Point PROFESSIONAL – Professional Lighting Integration

VONDOM Access Point PROFESSIONAL is designed for larger installations and integration with professional building automation systems.

It is particularly relevant when lighting needs to be operated through a central control console or integrated into a suitably planned KNX or bus-based system.

The exact technical integration must be coordinated with the existing building automation infrastructure.

Our recommendation: Choose advanced WiFi or DMX control only when you genuinely need these functions. For fixed lighting colours, standard RGB LED is usually the most practical choice.

Battery or Mains Power – Which Is Better?

The battery-powered version provides approximately 6–8 hours of operation and requires around 4 hours for a full recharge.

The battery is designed for approximately 500 charging cycles. A charger is included. The appropriately equipped battery version also features IP65 protection.

When Do We Recommend the Battery Version?

Battery power is especially useful where no suitable permanent electrical supply is available.

Typical applications include:

- events and temporary installations,
- receptions and presentations,
- short-term decorative displays,
- locations without a suitable power connection.

For Christmas lighting operated for many hours each day over several weeks, we generally recommend the mains-powered version.

Our advice: Do not choose battery power simply for its apparent flexibility. Where a suitable power supply is available, the wired version is usually more convenient for continuous use.

How Stable Is VONDOM CHRISMY?

CHRISMY features a sturdy steel base with adjustable feet to compensate for minor unevenness in the ground.

Optional stainless steel ground-fixing plates provide additional security. They replace the adjustable feet, extend several centimetres beyond the base and feature mounting holes for anchoring CHRISMY securely to the ground.

How Do You Clean and Maintain CHRISMY?

Cleaning is straightforward. For normal dirt, use a soft cloth, water and a mild detergent. More stubborn dirt can be removed from the robust plastic surfaces with a pressure washer, provided this is permitted for the specific product version. Avoid aggressive cleaners, abrasives and hard brushes.

about Vondom

Product information

Vondom stands for a modern lifestyle. Vondom indoor & outdoor furniture is designed with passion for people who appreciate innovation and quality - people like you who love trends and demand the best.

Focus on design
Design is the key to our success. With each new collection, we create spaces full of glamor and uniqueness. Vondom furniture brings life and elegance to every room, so you can enjoy life to the full.

Global designers
Vondom collections are created in collaboration with international designers such as Fabio Novembre, Karim Rashid and many more. Their passion for modern forms and culture makes every piece of furniture an exclusive work of art.

Sustainability & Innovation
Sustainability is a core value at Vondom. Vondom is continuously researching new technologies and materials to protect our environment. Vondom shares this knowledge in workshops, exhibitions and events worldwide.

Global success
Vondom is present in over 120 countries, with flagship stores and showrooms around the world, including Valencia, Miami, Los Angeles and Shanghai.

All About Your Purchase

Personal Offers Instead of Price Wars

Questions? Here Are the Answers.

Shipping the Way It Should Be

Bonus Program

Current Deals %

Our Showroom in Rüsselsheim

Real Projects, Real Quality

Materials, Care & Accessories

available options

Plug

Product information

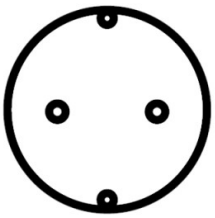

EU



AUS

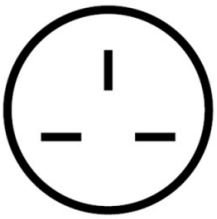

UK

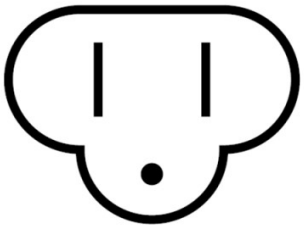

USA

Lighting

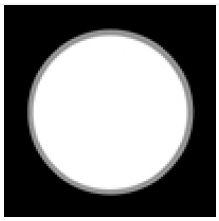

LED white

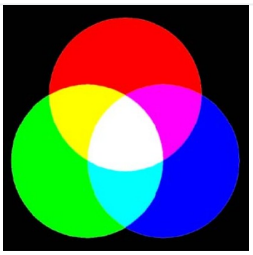

LED RGB (+189,00 €)

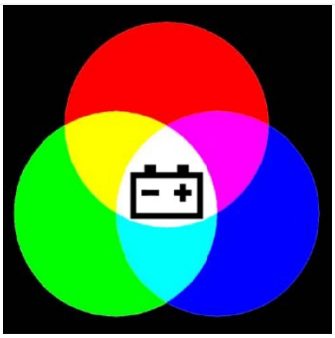

LED-RGB+rechargeable battery (+325,00 €)



LED-RGB WIFI (+210,00 €)

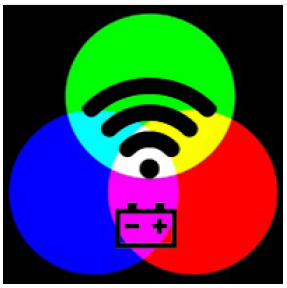

LED RGB WIFI+Battery (+409,00 €)

Floor mounting

Product information



No

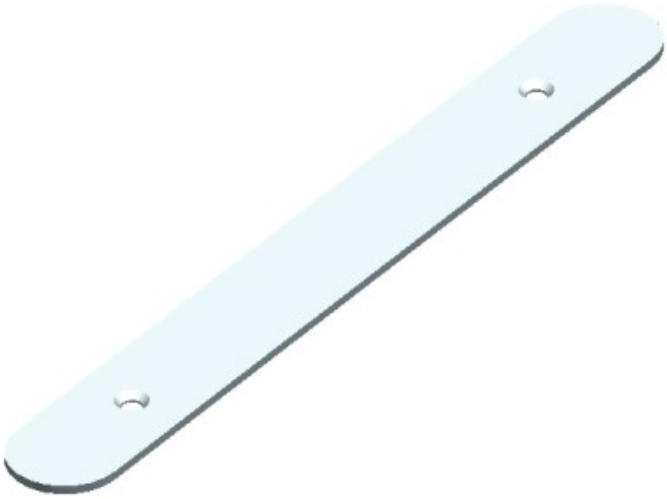

yes (+115,00 €)

Care Products

Product information

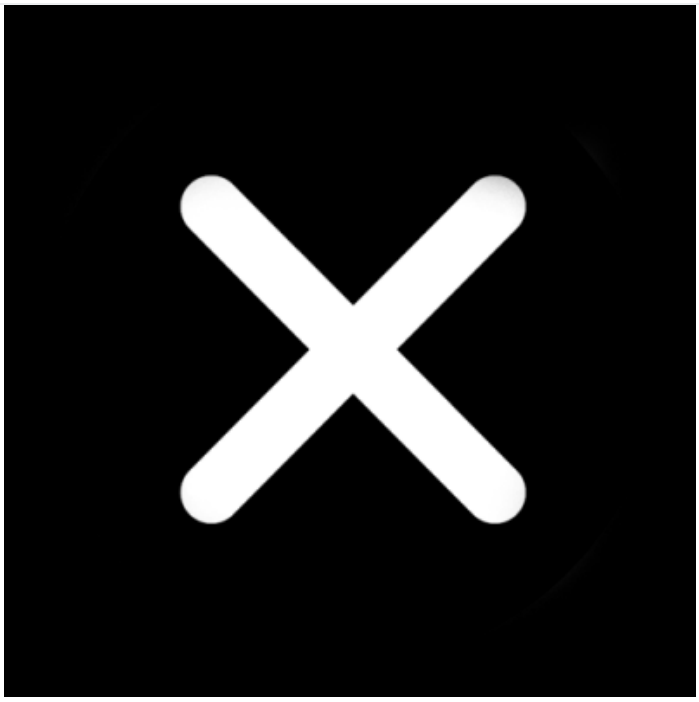

no



Surface Cleaner (+35,00 €)