Product information

SERRALUNGA floor lamp LADY MARY Lacquered

Art.Nr.: SER51 / manufacturer: Serralunga







SERRALUNGA

4.360,15 €

Regular retail price ~~4.495,00 €~~ (you save 134,85 €)

incl. 19% VAT incl. Shipping

Delivery time: 6 - 8 weeks

Product information

Dimensions / Technical data:

Approx. dimensions: Ø bottom 53cm, Ø top 70cm, height 208cm

Material: LLDPE polyethylene translucent = matt or glossy lacquered, unbreakable

Available metallic colors optional: See color palette

Protection class: IP65

Lighting: 2 x halogen tube T5 49 Watt, 4375 Lumen, 4000 Kelvin, 220/240 Volt

Supply cable: Length 2 meters, black

Special feature:
Suitable for indoor use
UV-resistant
Resistant to temperatures (-60ºC to +80ºC)
Shock and wear resistant. 100% reusable

Delivery: INCLUDES illuminant

Available accessories: Floor mounting (consisting of 5 stainless steel plates with holes for screwing)

Product description

The Lady Mary Floorlamp is part of the family of floor lamps designed by Marc Sadler for Serralunga. The floor lamp features a lacquered surface desorated using a special engraving method invented by Serralunga to create an astonishing effect of light and shade that is one of its kind. The Lady Jane is over 2 meters high and is suitable for both indoor as well as outdoor.

Serralunga Clean Fighter

SERRALUNGA presents CLEAN FIGHTER, a new innovative composite for fast and efficient cleaning.

As part of Serralunga's ongoing research and innovation activities, a new compound has been developed: Clean Fighter.

Clean Fighter is an innovative composite that allows fast and efficient cleaning of all Serralunga furniture, flower pots and furnishings in standard colors. Less time spent cleaning is the result. CLEAN FIGHTER is not needed for products in matt or glossy finish.

Clean Fighter is absolutely versatile. Particular feature is the ability of the material to adapt to different shapes.

about Serralunga

Product information

The first in Europe to develop rotational molding technology, the first to introduce the design jug and conceive the oversized jug. The first to design the illuminated jug, the first to exhibit an industrial vase in a museum and the first to develop new painting technologies with patterns.

Those who choose Serralunga can recognize and appreciate originality.

A FAMILY BUSINESS WITH HEART

THE HERITAGE
Serralunga was founded in Biella in 1825 and is the name of the family that has been the creative and entrepreneurial heart of the company for six generations, producing modern outdoor furniture.

The company was founded as a tannery and then moved to leather processing for industrial purposes. The real revolution came with the processing of plastic and then with the rotational molding technology imported from the United States, which has produced countless Italian design objects such as outdoor lighting and contemporary furniture, all made in Italy.

MADE IN ITALY
Serralunga continues the excellence that has long been associated with the "Made in Italy" label, while offering new ways of living that allow us to relax and unwind with furnishings that enrich our lives.

CULTURAL INNOVATION
Serralunga is known for pushing the boundaries of materials, technologies and aesthetics with its sense of innovation and craftsmanship to create groundbreaking products that both inspire and delight.

All About Your Purchase

Personal Offers Instead of Price Wars

Questions? Here Are the Answers.

Shipping the Way It Should Be

Bonus Program

Current Deals %

Our Showroom in Rüsselsheim

Real Projects, Real Quality

Materials, Care & Accessories

available options

Serralunga lacquer paint

Product information


Matt - sky blue LAM


Matt - Blue LBM

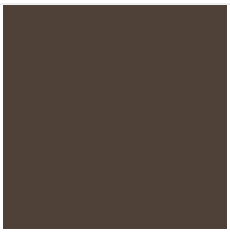
Matt - Dark Gray LGM


Matt - copper LCM


Matt - Titanium LTM


Matt - brass LOM


Matt - Sand LSM


Glossy - Oro LGO


Glossy - Argento LCH

Glossy - white LWH

Floor mounting


No

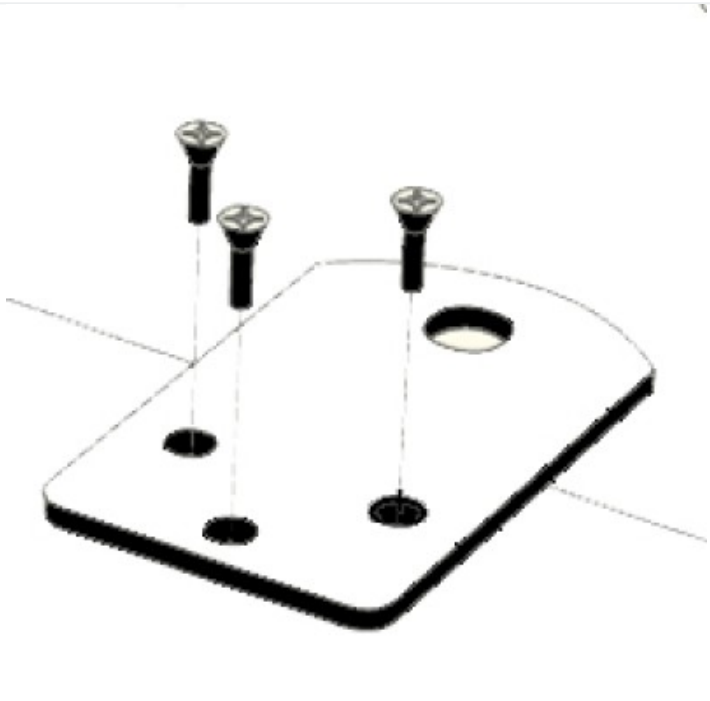
yes (+90,00 €)